E.O. 7179

DE HAVILLAND AIRCRAFT of CANADA

PAGE

STANDARDS SHEET

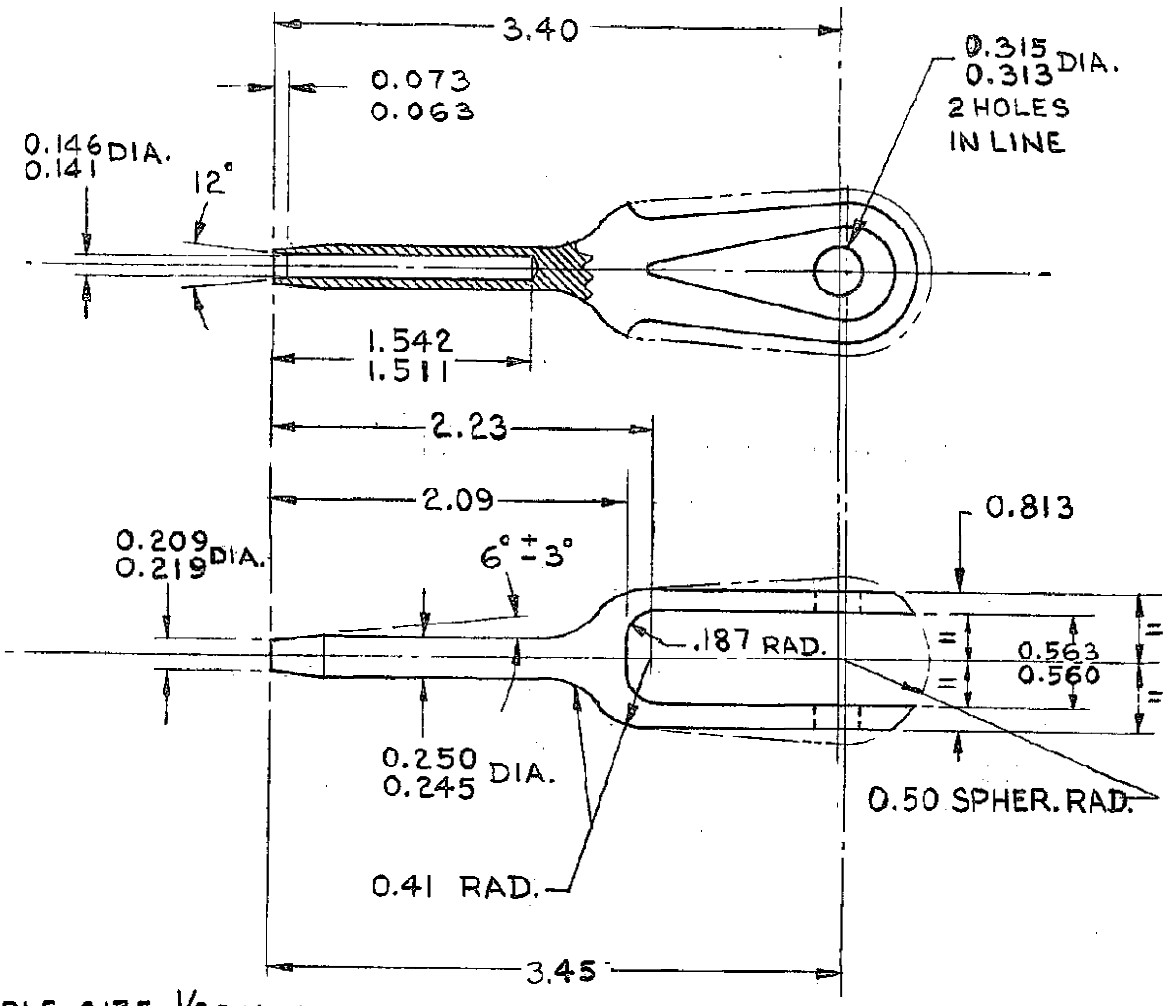

CABLE SIZE 1/8 DIA NOMINAL.

MATERIAL:
CORROSION RESISTANT STEEL
SPEC.: MIL-S-7720 COND B 303S

DRAWN	R.J.TOMS	CLASSIFICATION	STANDARD
CHECKED		SWAGED FORK END	CSP 238
STRESSED	B.S.		
APPROVED	KINSMAN		
	D.H.S.		FMC 71867