THE INFORMATION, TECHNICAL DATA AND DESIGNS DISCLOSED IN THIS DOCUMENT (THE "INFORMATION") ARE EITHER THE EXCLUSIVE PROPERTY OF DE HAVILLAND INC., OR ARE SUBJECT TO PROPRIETARY RIGHTS OF OTHERS. THE INFORMATION IS NOT TO BE USED FOR DESIGN OR MANUFACTURE, OR DISCLOSED TO OTHERS WITHOUT THE EXPRESS PRIOR WRITTEN CONSENT OF DE HAVILLAND INC.

de HAVILLAND

CAGE CODE 71867

CSP STANDARD

THE HOLDER OF THIS DOCUMENT, BY ITS RETENTION AGREES TO HOLD THE INFORMATION IN CONFIDENCE. THESE RESTRICTIONS DO NOT APPLY TO PERSONS HAVING PROPRIETARY RIGHTS IN THE INFORMATION, TO THE EXTENT OF THOSE RIGHTS

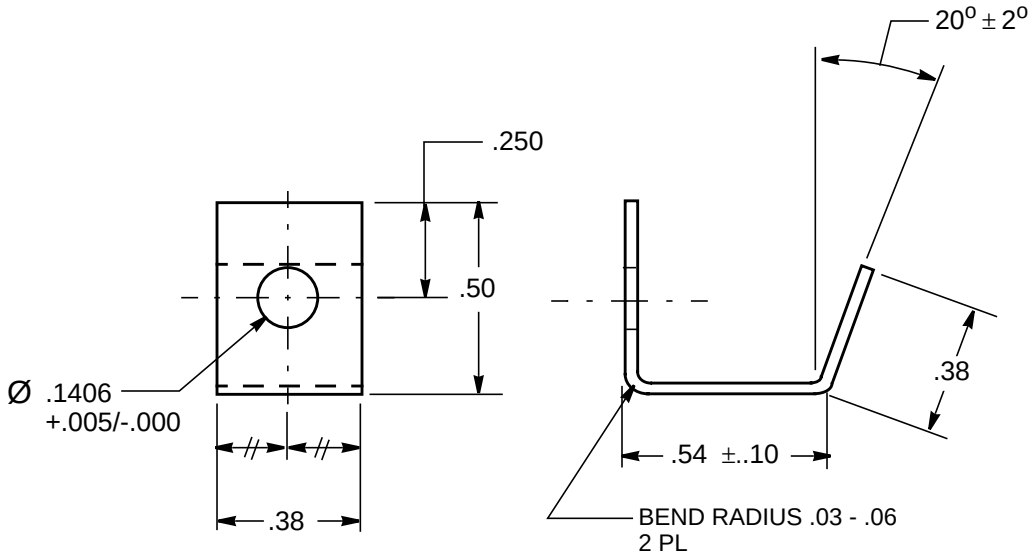

CSP 517-101 BRACKET

CSP 517-1 SWITCH GUARD KIT - Bill of Material					
ITEM	**QTY**	**DESCRIPTION**	**PART NUMBER**	**MATERIAL**	**FINISH**
1	1	BRACKET	CSP 517-101	.032 - .040 THK 5052-H32/H34 AL ALLOY, COMM'L	MIL-C-5541 CL 1A CLEAR
2	1	SCREW, #6-32	NAS 601-7	---	---
3	1	WASHER, FLAT	NAS1149DN632J	---	---
4	1	NUT, SELF-LOCKING	MS21042-06	---	---

NOTES:

1.REMOVE BURRS AND BREAK ALL SHARP EDGES .005/.010 RADIUS OR CHAMFER

2. TOLERANCES UNLESS OTHERWISE SPECIFIED: .XXX ±.010

.XX ±.030

3. ALL DIMENSIONS IN INCHES

SEE ENGINEERING STANDARDS APPROVAL RECORD FOR ORIGINAL SIGNATURES AND CHANGE SUMMARY

DRAWN	B. EDWARDS	**SWITCH GUARD KIT**	**CSP 517**
CHECKED	J. MACCOLL		
STRESSED	E. GIOVANNETTI		SHEET: **1 of 1**
APPROVED	B. EDWARDS		

REV:
REV:
REV:
REV:
REV:
APPROVED:- 27 FEB 2007