MOD 6/1003

DE HAVILLAND AIRCRAFT of CANADA

PAGE

STANDARDS SHEET

REF. C6 TE 1045
14."00 PER A/C.

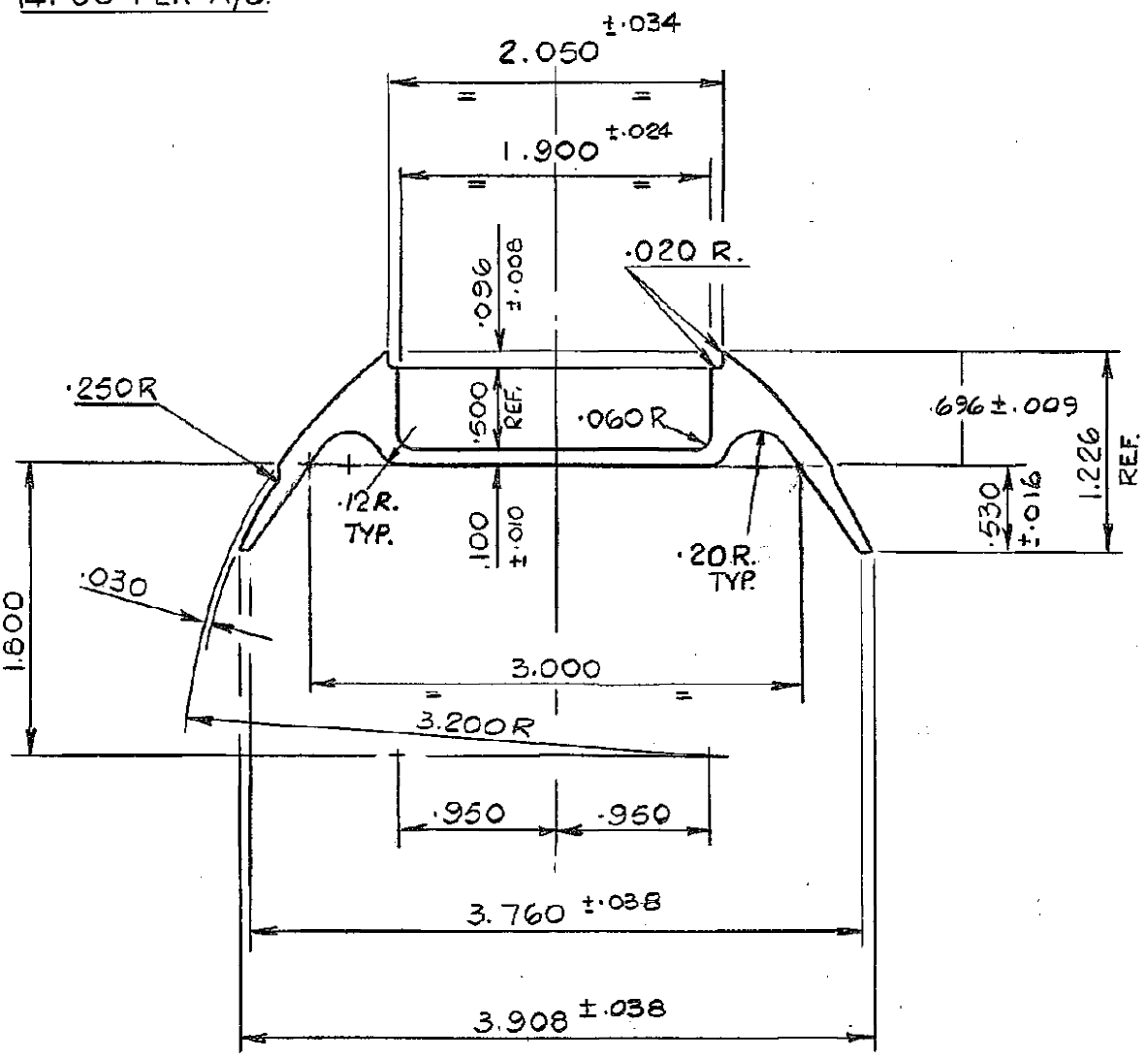

MATERIAL - AL. ALLOY 2024-T4
SPEC. - QQ-A-267 TEMP. T4

NOTE:- THIS EXTRUSION TO FIT WITH CV458

DRAWN	GRAY	CLASSIFICATION	STANDARD
CHECKED	R.W.H.	EXTRUDED SHAPE	CV457
STRESSED	A. DEANE		
APPROVED	RENNINSON		
	I.T.S.		

(A) REDRAWN - TOLERANCE ADDED E. EDWARDS 21-7-66. GRAY

·12R. & ·20R. ADDED ·25R. DELETED

(B) TOL. ● ·530 WAS ±.009
TOL. ● 3.760 WAS ±.034
3.908 ±.038 WAS REF. DIM.
.696 ±.009 ADDED 11-9-73