# DE HAVILLAND AIRCRAFT of CANADA

PAGE

## STANDARDS SHEET

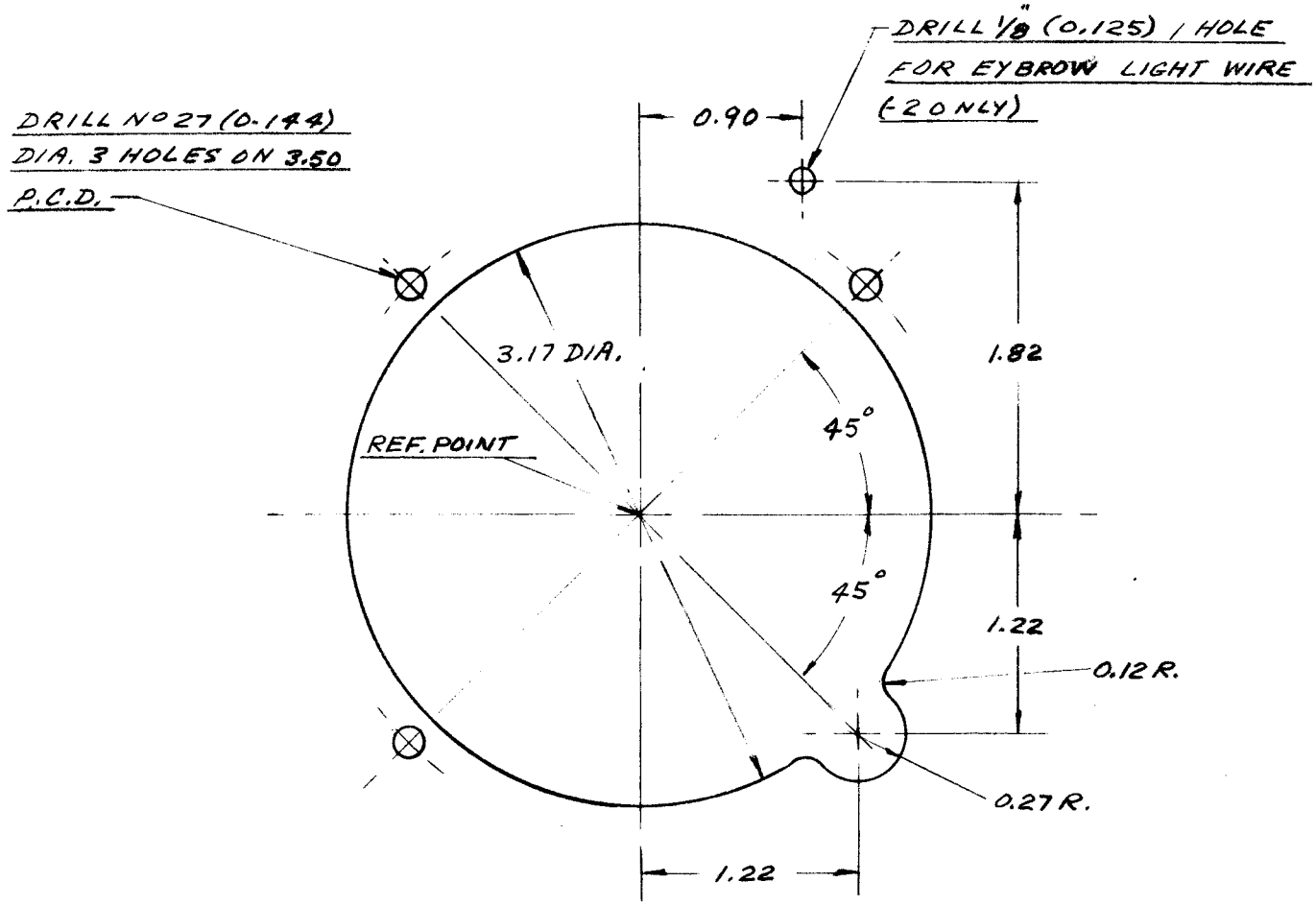


| PART No | LIGHT WIRE HOLE |
|---|---|
| -1 | NOT REQD |
| -2 | REQD |

| | | | |
|---|---|---|---|
| DRAWN | F. ROWE | CLASSIFICATION | STANDARD |
| CHECKED | | PANEL CUTOUT - 2 3/4" DIAL INST, LOWER R.H. SUMP. | DS 31 |
| STRESSED | | | |
| APPROVED | 13.2.62 | | |

FMC 71867