This drawing is private and confidential and is supplied on the express condition that it is not to be used for any purpose or copied or communicated to any other person without the permission of THE DE HAVILLAND AIRCRAFT OF CANADA LIMITED

REPORT ALL DRAWING ERRORS TO ENGINEERING

REVISIONS

CHANGE	ITEM NO.	DESCRIPTION	DATE	DRAWN	CHECKED	STRESS	APPROVD.
A		DIMENSION 1.125 MAX WAS 1.010	18/9/74				
B		PT. No. 'FCA-210-47' & 'MS27401-27' ADDED TO APPROVED VENDOR	20 JAN 1990	J. MAIN	L.H.		

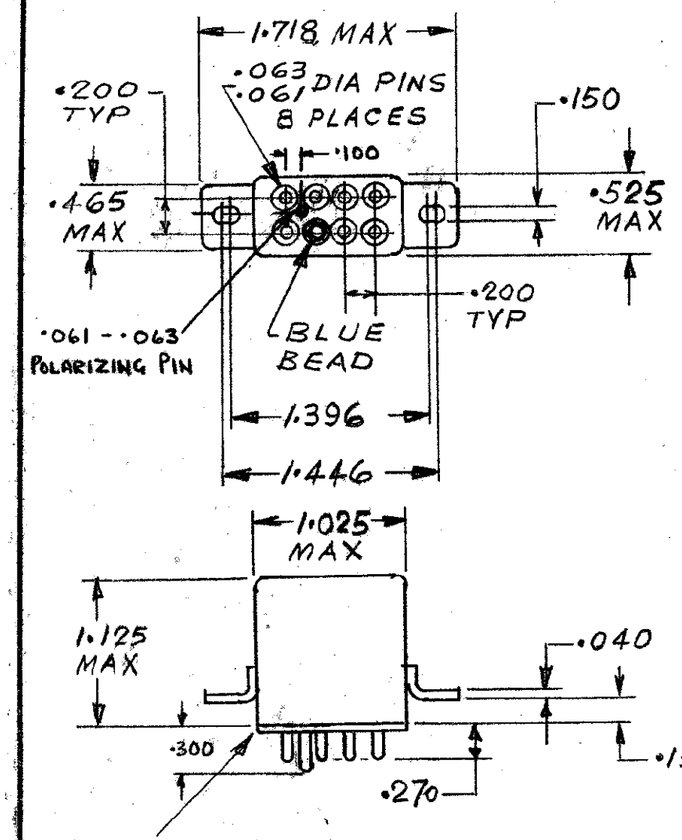

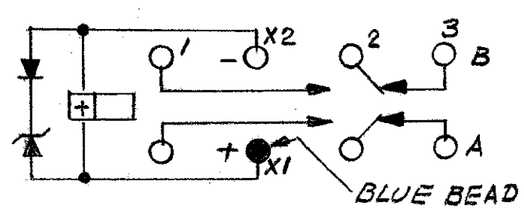

SCHEMATIC SHOWN DE-ENERGIZED

APPROVED VENDOR

PART No	VENDOR	VENDOR PART No	VENDOR CODE
DSC157-1	DEUTSCH RELAYS INC.	E210-1147	99699
	LEACH CORP. RELAY DIV.	J-D4L-050	35344
	STRUTHERS DUNN INC	FCA-210-47	
	MIL. SPEC.	MS27401-27	

NOTES

1. Relay shall conform to MS27401-2, except for the following.
2. Coil shall be transient suppressed as shown in schematic.
3. Coil suppression shall limit back EMF to 42 volts max.
4. Operate time at 25°C and 28 vdc. 10 milliseconds max.
5. Release time at 25°C and 28 vdc. 15 milliseconds max.
6. Bounce time 1 millisecond max.

SOURCE CONTROL DRAWING

ONLY THE ITEM(S) LISTED ON THIS DRAWING AND IDENTIFIED BY VENDOR'S NAME(S), ADDRESS(ES) AND PART NUMBER(S) HAVE BEEN APPROVED BY THE DE HAVILLAND AIRCRAFT OF CANADA LIMITED FOR THE USE IN DHC AIRCRAFT. A SUBSTITUTE ITEM SHALL NOT BE USED WITHOUT PRIOR APPROVAL BY THE DE HAVILLAND AIRCRAFT OF CANADA LTD.

DRAWN	M. DOLAN
CHECKED	J.J. Gilmour
STD. M&P	SCHOLTENER
STRESS	DEWEEP
CH. DRAFT.	
DATE	21-8-73

THE DE HAVILLAND AIRCRAFT OF CANADA LIMITED
DOWNSVIEW ONTARIO

DRAWING TITLE

RELAY

10 AMP. 2PDT - PLUG-IN

CODE IDENT NO.	DWG SIZE	DRAWING NO.	RELEASE	REV.
71867	B	DSC 157	P	B

SCALE 1:1	WGT. CALC .09 LB.	ACTUAL	SHEET