The information, technical data and designs disclosed in this document (the "Information") is either the exclusive property of de Havilland Inc. or is subject to proprietary rights of others. The Information is not to be used for design or manufacture or disclosed to others without the express prior written consent of de Havilland Inc. The holder of this document, by its retention and use, agrees to hold the Information in confidence. These restrictions do not apply to persons having proprietary rights in the Information, to the extent of those rights.

DSC229 01-D

FASTENER CODES	
CODE	FASTENER
XXX	XXXXXXXXXX
XXX	XXXXXXXXXX

DO NOT SCALE DRAWING

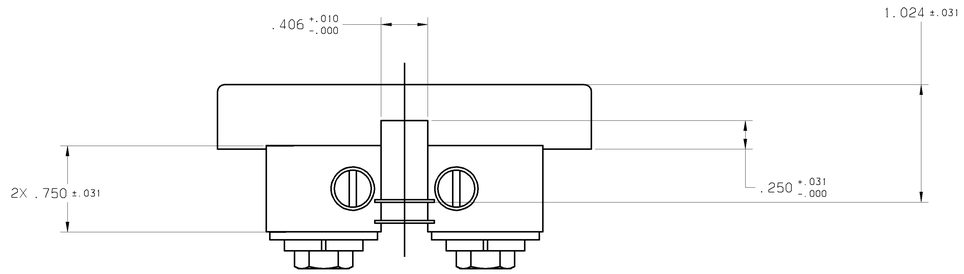

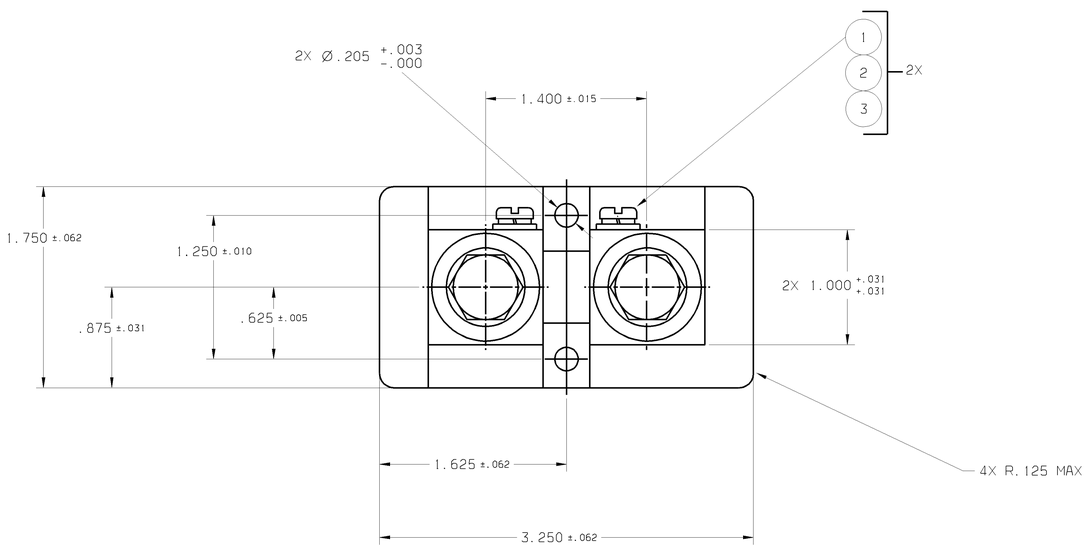

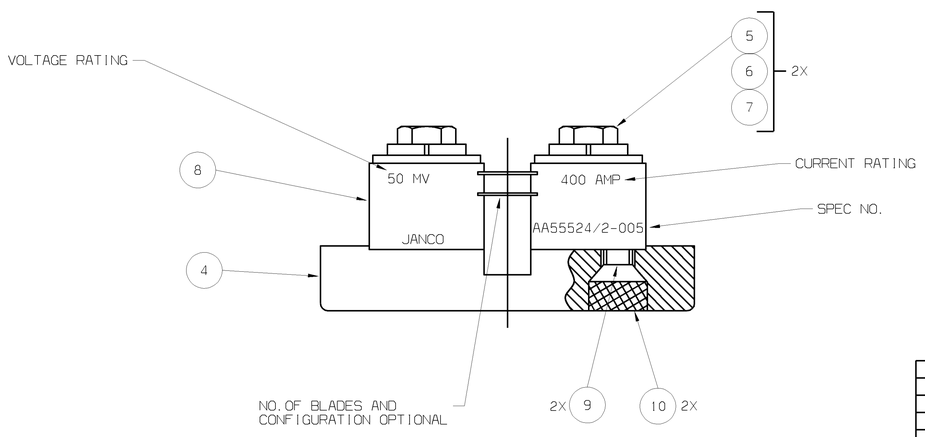

NOTES:

1) SHUNT TO BE MANUFACTURED TO MIL-S-61 STD.
2) PROCUREMENT SHALL STATE THE DSC NUMBER AND THE MANUFACTURERS PART NUMBER ON THE PURCHASE ORDER.
3) MOUNTING HARDWARE TO CONFORM TO ANSI/ASME OR EQUIVALENT.
4) SHUNT BASE MATERIAL: MOLDED PLASTIC.
5) BLADE MATERIAL: MANGANIN.
6) TERMINAL BLOCK MATERIAL: BRASS.
7) VOLTAGE RATING SHALL BE 50MV
8) THE SHUNTS LISTED ON THIS DRAWING CONFORM TO SPECIFICATION A-A-55524/2.
9) INTERPRET DRAWING IAW ASME Y14.5M-1994.

D.H PART NUMBER	DSC 229-1		CURRENT RATING
VENDOR	PART NO.	F.S.C	
JANCO CORPORATION BURBANK CALIFORNIA	8331	91812	250A
JANCO CORPORATION BURBANK CALIFORNIA	MSB251 OR 8300-250		250A

D.H PART NUMBER	DSC 229-3		CURRENT RATING
VENDOR	PART NO.		
JANCO CORPORATION BURBANK CALIFORNIA	8331-300	91812	300A
JANCO CORPORATION BURBANK CALIFORNIA	MSB301 OR 8300-300		300A

REVISIONS

REVISION	ITEM NO	ZONE	DESCRIPTION	ENG AUTH	DRAWN	DATE
C			DRAWING NOW CATIA CONTROLLED. JANCO SHUNT PART NUMBERS MSB251 AND MSB301 REPLACE 8331 AND 8331-300 RESPECTIVELY FOR POST MS 8QBM2401. (RFC 333056)	MS 8QBM2401	C.MEZRAANI	2008/02/11
D			ADDED SHUNT P/N 8300-250 & 8300-300, TO THE TABLE. P/N'S 8300-250 & 8300-300 ARE EQUIVALENT TO MSB251 & MSB301 RESPECTIVELY. (RFC 333056)	MS 8QBM2401	C.MEZRAANI	2008/06/24

FIND NUMBER	ZONE	CAGE CODE	PART NO	DESCRIPTION	QUANTITY REQ PER DASH NO			
			OP0018	EPOXY, NO. 5 A & B	A/R			
			1/4-20UNCX5/8FH	SCREW, MACH, FH SLOT, CL 2A; 82 (MAT'L: BRASS; FINISH: NONE)	10			
			8300-B2-(TAB)	ELEMENT ASSEMBLY MSB	2			
			8300-44	WASHER, FLAT (#3/8); (MAT'L: BRASS; FINISH: NONE)	1			
			51-9	WASHER, LOCK (#3/8); (MAT'L: PH BRZ; FINISH: CAD PLATE)	2			
			3/8-16UNC2AX5/8	BOLT, HEX HD; (MAT'L: BRASS; FINISH: NONE)	2			
			8200-B5(TAB)	BASE, SHUNT	1			
			38-33	WASHER, FLAT (#8); (MAT'L: BRASS; FINISH: NONE)	2			
			51-7	WASHER, LOCK (#8); (MAT'L: PH BRZ; FINISH: CAD PLATE)	2			
			8-32X3/8	SCREW, MACH, PH SLOT, CL 2; (MAT'L: BRASS; FINISH: NONE)	2			

BILL OF MATERIAL

DASH NO	NEXT ASSY DWG	QTY REQ'D PER ASY	USED ON
	8Z4556		
	82410009		

NEXT HIGHER ASSY

FASTENER CODE: N MFD HD NEAR SIDE; F MFD HD FAR SIDE
HOLE PREPARATION (NOTE 3): DASH NO; GRIP LENGTH

NOTES:
1. WHEN LOCATION OF FASTENER HEAD IS OPTIONAL "N" OR "F" IS OMITTED
2. LENGTH OF PERMANENT FASTENER TO BE SPECIFIED ON DRAWING (REFERENCE ONLY). LENGTH TO BE CONFIRMED ON INSTALLATION. DWGS WILL NOT BE CHANGED IF LENGTH IS INCORRECT
3. METHOD OF PREPARATION FOR FASTENER: NO SYMBOL-PLAIN HOLE; "C"-COUNTERSINK; "CC"-DOUBLE COUNTERSINK; "D"-DIMPLE

FASTENER IDENTIFICATION

M2	IVD ALUMINUM	PPS 24.02
F21	PRIMER	PPS 21.03
F19	EPOXY PRIMER	PPS 34.08
C1	ALODINE	PPS 32.01
A1	ANODIZE	PPS 32.03
CODE	PROTECTIVE TREATMENT	DE HAVILLAND PRODUCTION PROCESS STANDARD

PRODUCTION PROCESS STANDARDS (PPS) C8-1010 IN ADDITION TO THOSE STANDARDS CALLED UP IN THE FIELD OF THIS DRAWING SHALL FORM PART OF THIS DRAWING FOR ALL MANUFACTURING AND QUALITY REQUIREMENTS

THIRD ANGLE PROJECTION

REQUIREMENTS-UNLESS OTHERWISE SPECIFIED

GENERAL	LIMITS
1. DIM ARE IN INCHES 2. SURFACE ROUGHNESS 125 ✓ MAX 3. REMOVE SHARP EDGES .015 MACHINE PARTS 4. EDGE FINISHING OF PARTS IN ACCORDANCE WITH DCS-27-02 5. THREADS, IN ACCORDANCE WITH MIL-S-7742	1. DECIMALS 1 PLACE ± .1 2 " ± .03 3 " ± .010 2. DIMENSIONS & TOLERANCES APPLY AFTER PLATING 3. ANGULAR TOLERANCE FOR MACHINED PARTS ±0°30' 4. FOR ADDITIONAL TOLERANCES SEE D550

ENG AUTH	MS 8QBM2401	
DRAWN	C.MEZRAANI	2008/02/11

SEE EDAR FOR APPROVAL SIGNATURES

THIS DRAWING PER ANSI Y14.5M, 1982

DWG PREPARED FOR de Havilland Inc. BY XXX XXX

CAGE CODE XXXXX

☐ INTERCHANGEABILITY ☐ SERIALIZATION ☐ N/A
☐ REPLACEABILITY ☐ STATIC SENSITIVE
PART CHARACTERISTICS/SERIALIZATION

CAD APPLICABILITY YES ☒ NO ☐
ELECTRONIC MEDIUM CATIA VERSION 4.2.4

THIS DRAWING IS THE SOLE AUTHORITY FOR PRODUCT DEFINITION AND ACCEPTANCE

de Havilland Inc.
Downsview, Ontario, Canada

DRAWING TITLE: SHUNT INSTRUMENT

RWG SIZE	CAGE CODE	DRAWING NO	RELEASE	REV
E	71867	DSC229	P	-D

SCALE 1/1 MODEL VERSION: 01 SHEET 01 OF 01

© 1995 de Havilland Inc.

FORM NO: 4996-1