This drawing is private and confidential and is supplied on the express condition that it is not to be used for any purpose or copied or communicated to any other person without the prior permission of **The de Havilland Aircraft Company of Canada**, Downsview, Ontario.

THIS DRAWING IS CADAM CONTROLLED

REPORT ALL DRAWING ERRORS TO ENGINEERING

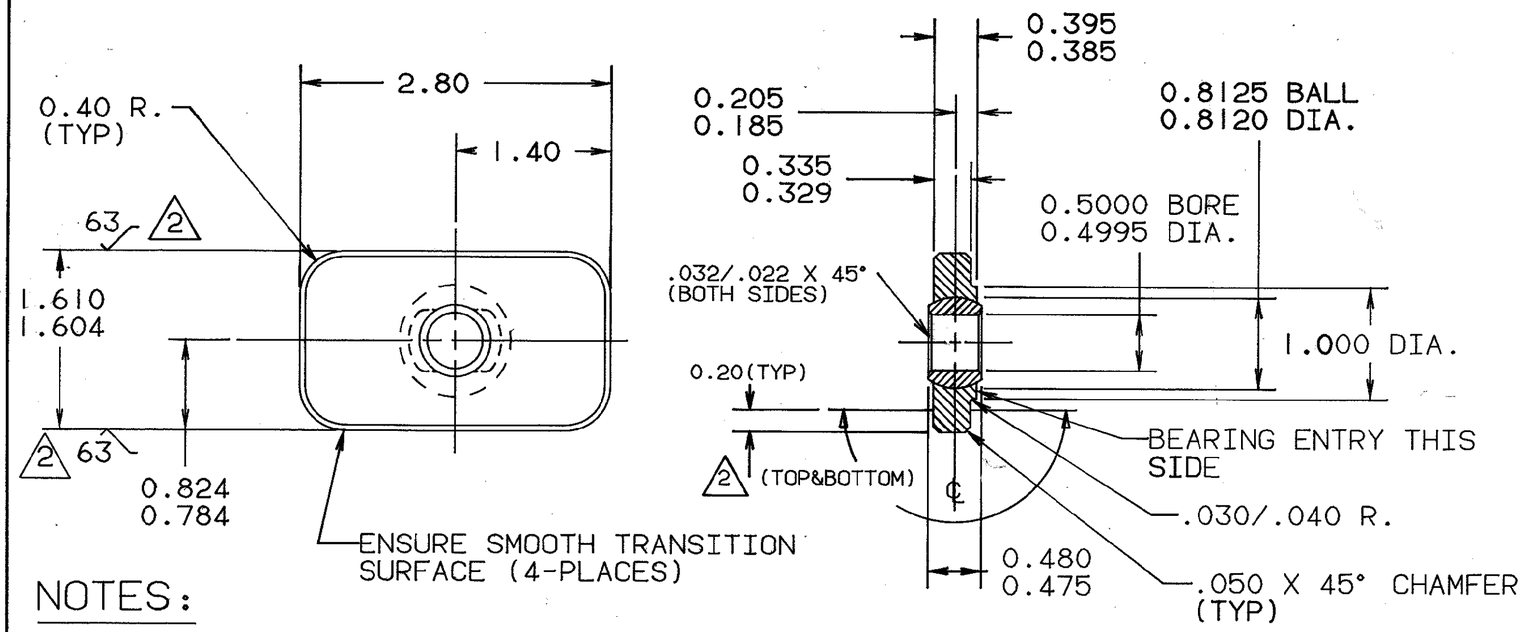

NOTES:

1. MATERIAL: BALL-STELLITE #6 AMS5387 RC37 MIN. Ⓒ
   RACE-CRES AMS5362 (347) OR AMS 5646(347) OR AMS5525 OR AMS5737 (A286)

2. FINISH: BALL-SPHERICAL SURFACE SHALL BE LUBRICATED WITH A HIGH TEMPERATURE DRY FILM LUBRICANT.
   RACE-SPHERICAL BORE AND OUTER SURFACES AS NOTED 2 SHALL BE NITRIDED PER AMS2753 OR MALCOMIZED, BUT OPTIONALLY MAY BE APPLIED TO ALL OTHER SURFACES.

3. RADIAL CLEARANCE IS .0005/.0020. BALL MUST BE ROTATED FREELY UNDER FINGER PRESSURE AT 72°F, AND MUST BE FULLY INTERCHANGEABLE. (NO SLECTIVE ASS'Y IS ALLOWED)

4. BALL MISALIGNMENT - 8° MAX

		APPROVED VENDORS		
PART NO.	NAME	PSI	VALLEY-TODECO Ⓐ	ASTRO Ⓐ
DSC 424-1	ASS'Y.	P28340	VTB10460	AMBB-3009
DSC 424-2	BALL	P28341	VTB10461	AMBB-3009B
DSC 424-3	RACE	P28343 Ⓓ	VTB10462	AMBB-3009R

		APPROVED VENDORS		
PART NO.	NAME	MPB Ⓐ	AURORA Ⓑ	
DSC424-1	ASS'Y	SS-8-100	BSE-8-4	
DSC424-2	BALL	BB-13-7.5-001	BSE-8-4 FBL	
DSC424-3	RACE	SS-8-100R	BSE-8-4 FR	

PROCUREMENT SHALL SPECIFY THE DSC AND THE VENDOR PART NUMBER ON THE PURCHASE ORDER.

REVISIONS

CHANGE	ITEM NO.	ZONE	DESCRIPTION	MOD. NO.	DATE	DRAWN	CHECKED	STRESS	APPROVD.
A			VALLEY TODECO, ASTRO & MPB NUMBERS ADDED.		11 5 90		P. LAW		
B			AURORA PART Nos ADDED		23 JAN 97	B. McDONALD	P. LAW		
C			ALTERNATE RACE MATERIAL SPEC AMS5646(347) ADDED		12 JUN 97	B. McDONALD	P. LAW		
D			PSI PART No. CORRECTION P28343 WAS P28342		27 APR 97	B. McDONALD			

DO NOT SCALE DWG

NEXT ASS'Y	USED ON	NO. REQD PER A/C	EFFY.
PART NO.			

CODE	PROTECTIVE TREATMENT	DE HAVILLAND PRODUCTION PROCESS SPECN.
F 19	EPOXY ZINC CHROMATE PRIMER	P.P.S. 34.08
C 1	ALODINE	P.P.S. 32.01
E 1	CADMIUM PLATE	P.P.S. 33.01
A 1	ANODIZE	P.P.S. 32.03

QUANTITY REQ. PER

ZONE	SHEET	CODE	PART NO.	DESCRIPTION	MATERIAL	MATL. SPEC.	FINAL HEAT TREAT	PROT. FINISH

LIST OF MATERIAL

REQUIREMENTS - UNLESS OTHERWISE SPECIFIED

GENERAL	LIMITS
1. DIMS ARE IN INCHES 2. SURFACE ROUGHNESS 125 √ MAX. 3. REMOVE SHARP EDGES .015 MACHINE PARTS 4. EDGE FINISHING OF PARTS IN ACCORDANCE WITH P.P.S. 27-02 5. THREADS IN ACCORDANCE WITH MIL-S-7742	1. DECIMALS 1 PLACE ± .1, 2 " ± .03, 3 " ± .010 2. DIMENSIONS & TOLERANCES APPLY AFTER PLATING 3. ANGLES ± 0°-30'

PRODUCTION PROCESS STANDARDS (P.P.S.) AND OTHER STANDARDS LISTED ON DWG 28-1010 IN ADDITION TO THOSE STANDARDS CALLED UP IN THE FIELD OF THIS DRAWING SHALL FORM PART OF THIS DRAWING FOR ALL MANUFACTURING AND QUALITY REQUIREMENTS.

MOD NO.		
DRAWN	K. MAK	25 JUL 88
CHECKED		18 8 88
APPROVED		21/4/89
STRESS		20/12/89
STD., M.&P.		30 AUG 88
CH. DRAFTN.		
TECH. DES.		
VA. OPS.	G. CIHOSKY	23 AUG 88

de HAVILLAND A BOEING COMPANY **CANADA**

DRAWING TITLE

RECTANGULAR BEARING ASS'Y
SLOT ENTRY-800°F
EXHAUST SYSTEM

DWG. SIZE	CODE IDENT. NO.	DRAWING NO.	RELEASE	REV.
C	71867	DSC 424	P	D

SCALE	WGT. CALC.	ACTUAL	SHT.	OF SHT.
FULL				

DSC 424