The information contained herein is proprietary to Boeing of Canada Ltd. and shall not be reproduced or disclosed in whole or in part or used for any design or manufacture except when such user possesses direct, written authorization from Boeing of Canada Ltd.

REPORT ALL DRAWING ERRORS TO ENGINEERING

REVISIONS										
CHANGE	ITEM NO.	ZONE	DESCRIPTION	VA. OPS.	ENG. AUTH.	ENG. RELEASE	DATE	DRAWN	CHECKED	STRESS	APPROVD

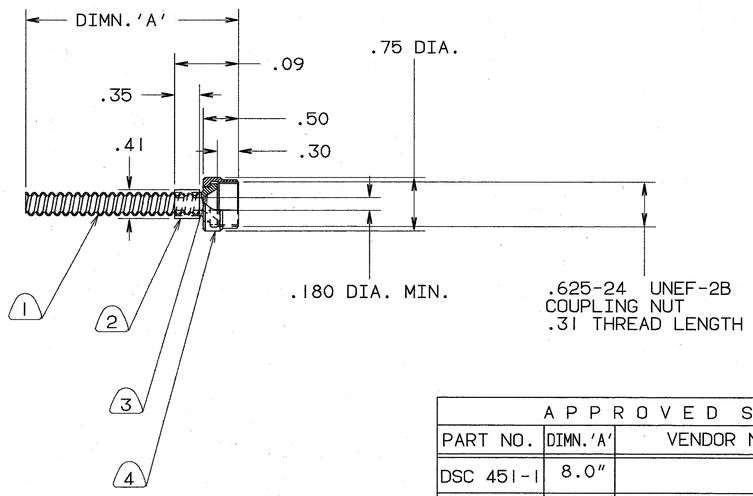

NOTES:

1. DSC 436-1.
2. OUTER FERRULE
   ALUMINUM MATERIAL AND FINISH WITH BLACK ANODIZING.
   EQUIVALENT TO FLITELINE P/N 03/01/003/02/3.
3. INNER FERRULE
   ALUMINUM MATERIAL AND FINISH WITH BLACK ANODIZING.
   EQUIVALENT FLITELINE P/N 02/02/004/02/3.
4. COUPLING NUT
   ALUMINUM MATERIAL AND FINISH WITH BLACK ANODIZING.
   EQUIVALENT TO FLITELINE P/N CP3345-5-3.
5. IT IS THE RESPONSIBILITY OF THE SUPPLIER TO SUBMIT TO BCDD FOR APPROVAL ANY CHANGE WHICH IMPACTS FORM, FIT AND/OR FUNCTION OF THE ASSEMBLY ORIGINALLY APPROVED.

APPROVED SOURCE OF SUPPLY					
PART NO.	DIMN.'A'	VENDOR NAME & ADDRESS	VENDOR PART NO.	CODE	WEIGHT
DSC 451-1	8.0"				

NEXT ASS'Y	USED ON	NO.REQD PER A/C	EFFY.
PART NO.			

QUANTITY REQ.PER		
F19	EPOXY PRIMER	P.P.S. 34.08
C1	ALODINE	P.P.S. 32.01
E1	CADMIUM PLATE	P.P.S. 33.01
A1	ANODIZE	P.P.S. 32.03
CODE	PROTECTIVE TREATMENT	DE HAVILLAND PRODUCTION PROCESS SPECN.

ZONE	SHEET	CODE	PART NO.	DESCRIPTION	MATERIAL	MATL.SPEC	FINAL HEAT TREAT	PROT. FINISH

BILL OF MATERIAL — DO NOT SCALE DWG

REQUIREMENTS-UNLESS OTHERWISE SPECIFIED

GENERAL
1. DIM ARE IN INCHES
2. SURFACE ROUGHNESS 125 ✓ MAX
3. REMOVE SHARP EDGES .015 MACHINE PARTS
4. EDGE FINISHING OF PARTS IN ACCORDANCE WITH P.P.S.27.02
5. THREADS IN ACCORDANCE WITH MIL-S-7742

LIMITS
1. DECIMALS
   1 PLACE ± .1
   2 " ± .03
   3 " ± .010
2. DIMENSIONS & TOLERANCES APPLY AFTER PLATING
3. FOR ANGLES & ADDITIONAL TOLERANCES SEE DS 50

PRODUCTION PROCESS STANDARDS(P.P.S.) AND OTHER STANDARDS LISTED ON DWG. C8-1010 IN ADDITION TO THOSE STANDARDS CALLED UP IN THE FIELD OF THIS DRAWING SHALL FORM PART OF THIS DRAWING FOR ALL MANUFACTURING AND QUALITY REQUIREMENTS.

ENG. AUTH.	8/1519	
DRAWN	E JIMENEZ	90-8-28
CHECKED	IKENO	90-10-3
APPROVED	VAN NUS	90-10-3
STRESS	F LAU	90-10-4
MAT.TECH.	P LAM	90-10-4
ENG. RELEASE	T PAVCNIK	90-10-11
TECH.DES.		
VA.OPS.	W FIELDER	90-10-3

Boeing of Canada Ltd.
de Havilland Division

DRAWING TITLE
CONDUIT ASSEMBLY

DWG SIZE	CODE IDENT.NO.	DRAWING NO.	RELEASE	REV.
D	71867	DSC 451 -	P	-

SCALE | WGT.CALC. | ACTUAL | SHT. 1 OF SHT.

DSC 451 -